PM700 series
Functions and characteristics

PowerLogic PM700.

The PowerLogic PM700 series meters offer all the measurement capabilities required to monitor an electrical installation in a single 96 x 96 mm unit extending only 50 mm behind the mounting surface.

With its large display, you can monitor all three phases and neutral at the same time. The anti-glare display features large 11 mm high characters and powerful backlighting for easy reading even in extreme lighting conditions and viewing angles.

The PowerLogic PM700 series meters are available in four versions to better fit specific applications:
- ■ PM700, basic metering with THD and min/max readings
- ■ PM700P, same functions as the PM700, plus two solid-state pulse outputs for energy metering
- ■ PM710, same functions as the PM700, plus one RS 485 port for Modbus communication
- ■ PM750, same functions as the PM710, plus two digital inputs, one digital output and alarms.

Applications
Panel instrumentation.
Sub-billing and cost allocation.
Remote monitoring of an electrical installation.
Harmonic monitoring (THD).
Alarming with under/over conditions and I/O status (PM750).

Characteristics
Requires only 50 mm behind mounting surface
The PM700 series meters can be mounted on switchboard doors to maximise free space for electrical devices.

Large back lit display with integrated bar charts
Displays 4 measurements at a time for fast readings. Uses only two clips for installation; no tools necessary.

Intuitive use
Easy navigation using context-sensitive menus.

Bar charts
Graphical representation of system loading and Status of Inputs/Outputs (PM750 and PM700P) provide system status at a glance.

Power and current demand, THD and min/max reading in basic version
A high-performance solution for trouble-free monitoring of your electrical installation.

Active energy class IEC 62053-22 class 0.5S (PM750) and IEC 62053-21 class 1 (PM700, PM700P, PM710)
Suitable for sub-billing and cost-allocation applications.

IEC 61557-12 Performance Standard
Meet IEC 61557-12 PMD/S/K55/0.5 (PM750) and IEC61557-12 PMD/S/K55/1 (PM700, PM700P, PM710) requirements for combined **P**erformance **M**easuring and monitoring **D**evices (PMD).

Innovative Power Meter
RS 485 communications, alarming and digital I/O in a single Power Meter (PM750).

Part numbers		
Power Meter	**Schneider Electric**	**Square D**
PM700 power meter - with basic readings including THD and Min/Max	**PM700MG**	**PM700**
PM700P power meter - same as PM700 plus two pulse outputs	**PM700PMG**	**PM700P**
PM710 power meter - same as PM700 plus RS 485 port	**PM710MG**	**PM710**
PM750 power meter - same as PM700 plus RS 485 port, 2 Digital inputs and 1 Digital output, and alarms	**PM750MG**	**PM750**
Parts and accessories		
DIN-rail Mounting Kit	**PM72DINRAILKIT**	
Set of connectors replacement (PM700, PM700P, PM710)	**PM7AND2HWKIT**	
Set of connectors replacement (PM750 only)	**PM750HWKIT**	

PM700 series
Functions and characteristics (cont.)

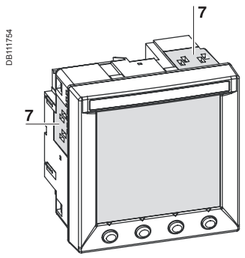

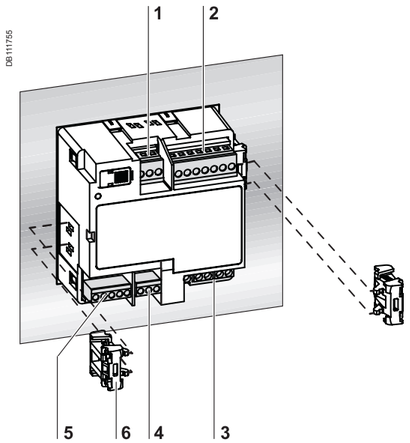

PM750.
1 Control power.
2 Voltage inputs.
3 Current inputs.
4 RS 485 port.
5 Digital input/output.
6 Mounting clips.
7 Mounting slot.

Selection guide		PM700	PM700P	PM710	PM750
Performance standard					
IEC 61557-12 PMD/S/K55/1 Requirements for combined Performance Measuring and monitoring Devices (PMD)		■	■	■	-
IEC 61557-12 PMD/S/K55/0.5 Requirements for combined Performance Measuring and monitoring Devices (PMD)		-	-	-	■
General					
Use on LV and HV systems		■	■	■	■
Current accuracy		0.5 %	0.5 %	0.5 %	0.4 %
Voltage accuracy		0.5 %	0.5 %	0.5 %	0.3 %
Active and reactive power accuracy		1.0 %	1.0 %	1.0 %	0.5 %
Active energy accuracy		1.0 %	1.0 %	1.0 %	0.5 %
Reactive energy accuracy		2 %	2 %	2 %	2 %
Sampling rate (samples/cycle)		32	32	32	32
Instantaneous rms values					
Current	Total, Phases and neutral	■	■	■	■
Voltage	**Total,** Ph-Ph and Ph-N	■	■	■	■
Frequency		■	■	■	■
Real and reactive power (1) and apparent power	Total and per phase	signed	signed	signed	signed
Power factor	Total	signed	signed	signed (2)	signed (2)
Energy values					
Active and reactive energy (1); and apparent energy		signed	signed	signed	signed
Demand values					
Current Thermal calculation mode only	Present and max.	■	■	■	■
Active, reactive, apparent power	Present and max.	■	■	■	■
Setting of power demand calculation mode	Sliding, fixed and rolling block	■	■	■	■
Other measurements					
Hour counter		■	■	■	■
Power quality measurements					
Harmonic distortion	Current and voltage	■	■	■	■
Data recording					
Min/max of instantaneous values		■	■	■	■
Alarms		-	-	-	■ (3)
Inputs/Outputs					
Digital inputs		-	-	-	2 (4)
Digital outputs		-	2 (5)	-	1 (6)
Display					
Green backlit LCD display		■	■	■	■
IEC or IEEE visualization mode		■	■	■	■
Communication					
RS 485 port		-	-	■	■
Modbus protocol		-	-	■	■
Firmware update via RS485 serial port				■	■

(1) Signed real and reactive power and energy. The power meter includes net values only.
(2) See register 4048. Negative sign "-" indicates lag.
(3) 15 user-configurable under and over conditions and in combination with digital inputs or output status.
(4) 2 operation modes are available: normal or input demand synchronisation.
(5) kWh and kVARh pulse output mode only.
(6) 3 operation modes are available: external, alarm or kWh pulse output.

PM700 series
Functions and characteristics (cont.)

PB100030-

Rear view of PM750.

Electrical characteristics			
Type of measurement			True rms up to the 15th harmonic on three-phase (3P, 3P + N) two-phase and single-phase AC systems 32 samples per cycle
Measurement accuracy	Current		± 0.5% from 1A to 6 A (PM700, PM700P, PM710) ± 0.4% from 1A to 6 A (PM750)
	Voltage		± 0.5% from 50V to 277V (PM700, PM700P, PM710) ± 0.3% from 50V to 277V (PM750)
	Power Factor		± 0.0034, from 1A to 6A and from -0.5 to +0.5
	Power		± 1% (PM700, PM700P, PM710) ± 0.5% (PM750)
	Frequency		± 0.02 Hz from 45 to 65 Hz
	Active Energy		IEC 62053-21 Class 1 (1) IEC 62053-22 Class 05.S (2)
	Reactive Energy		IEC 62053-23 Class 2
Data update rate			1 s
Input-voltage characteristics	Measured voltage		10 to 480 V AC (direct Ph-Ph) 10 to 277 V AC (direct Ph-N) up to 1.6 MV AC (with external VT) the lower limit of the measurement range depends on the PT ratio
	Metering over-range		1.2 Un (20%)
	Impedance		2 MΩ (Ph-Ph) / 1 MΩ (Ph-N)
	Frequency range		45 to 65 Hz
Input-current characteristics	CT ratings	Primary	Adjustable from 1 A to 32767 A
		Secondary	1 A or 5 A
	Measurement input range		5 mA to 6 A
	Permissible overload		15 A continuous, 50 A for 10 seconds per hour, 120 A for 1 second per hour
	Impedance		< 0.12 Ω
	Load		< 0.15 VA
Power supply	AC		100 to 415 ±10 % V AC, 5 VA; 50-60 Hz
	DC		125 to 250 ±20 % V DC, 3 W
	Ride-through time		100 ms at 120 V AC
Input	Digital inputs (PM750)		12 to 36 V DC, 24 V DC nominal, 12 kΩ impedance, 2.5 kV rms isolation, max. frequency 25 Hz, response time 10 ms
Output	Pulse outputs (PM700P)		3 to 240 V DC or 6 to 240 V AC, 100 mA at 25 °C, derate 0.56 mA per °C above 25 °C, 2.41 kV rms isolation, 30 Ω on-resistance at 100 mA
	Digital or pulse output (PM750)		8 to 36 V DC, 24 V DC nominal at 25 °C, 3.0 kV rms isolation, 28 Ω on-resistance at 100 mA
Mechanical characteristics			
Weight			0.37 kg
IP degree of protection (IEC 60529)			IP52 front display, IP30 meter body
Dimensions			96 x 96 x 69 mm (meter with display) 96 x 96 x 50 mm (behind mounting surface)
Environmental conditions			
Operating temperature	Meter		-5 °C to +60 °C
	Display		-10 °C to +55 °C
Storage temp.	Meter + display		-40 °C to +85 °C
Humidity rating			5 to 95 % RH at 50 °C (non-condensing)
Pollution degree			2
Metering category			III, for distribution systems up to 277/480 V AC
Dielectric withstand			As per EN 61010, UL508 - Double insulated front panel display
Altitude			3000 m max.
Electromagnetic compatibility			
Electrostatic discharge			Level III (IEC 61000-4-2)
Immunity to radiated fields			Level III (IEC 61000-4-3)
Immunity to fast transients			Level III (IEC 61000-4-4)
Immunity to impulse waves			Level III (IEC 61000-4-5)
Conducted immunity			Level III (IEC 61000-4-6)
Immunity to magnetic fields			Level III (IEC 61000-4-8)
Immunity to voltage dips			Level III (IEC 61000-4-11)
Conducted and radiated emissions			CE commercial environment/FCC part 15 class B EN 55011
Harmonics emissions			IEC 61000-3-2
Flicker emissions			IEC 61000-3-3

***(1)** PM700, PM700P, PM710.*
***(2)** PM750.*

Mid-range metering

PM700 series
Functions and characteristics (cont.)

Safety	
Europe	CE, as per IEC 61010-1 (1)
U.S. and Canada	cULus (UL508 and CAN/CSA C22.2 No. 14-M95, Industrial Control Equipment)
Communication	
RS 485 port (PM710 and PM750)	2-wire, up to 19200 bauds, Modbus RTU (double insulation)
Display characteristics	
Dimensions 73 x 69 mm	Green back-lit LCD (6 lines total, 4 concurrent values)

***(1)** Protected throughout by double insulation .*